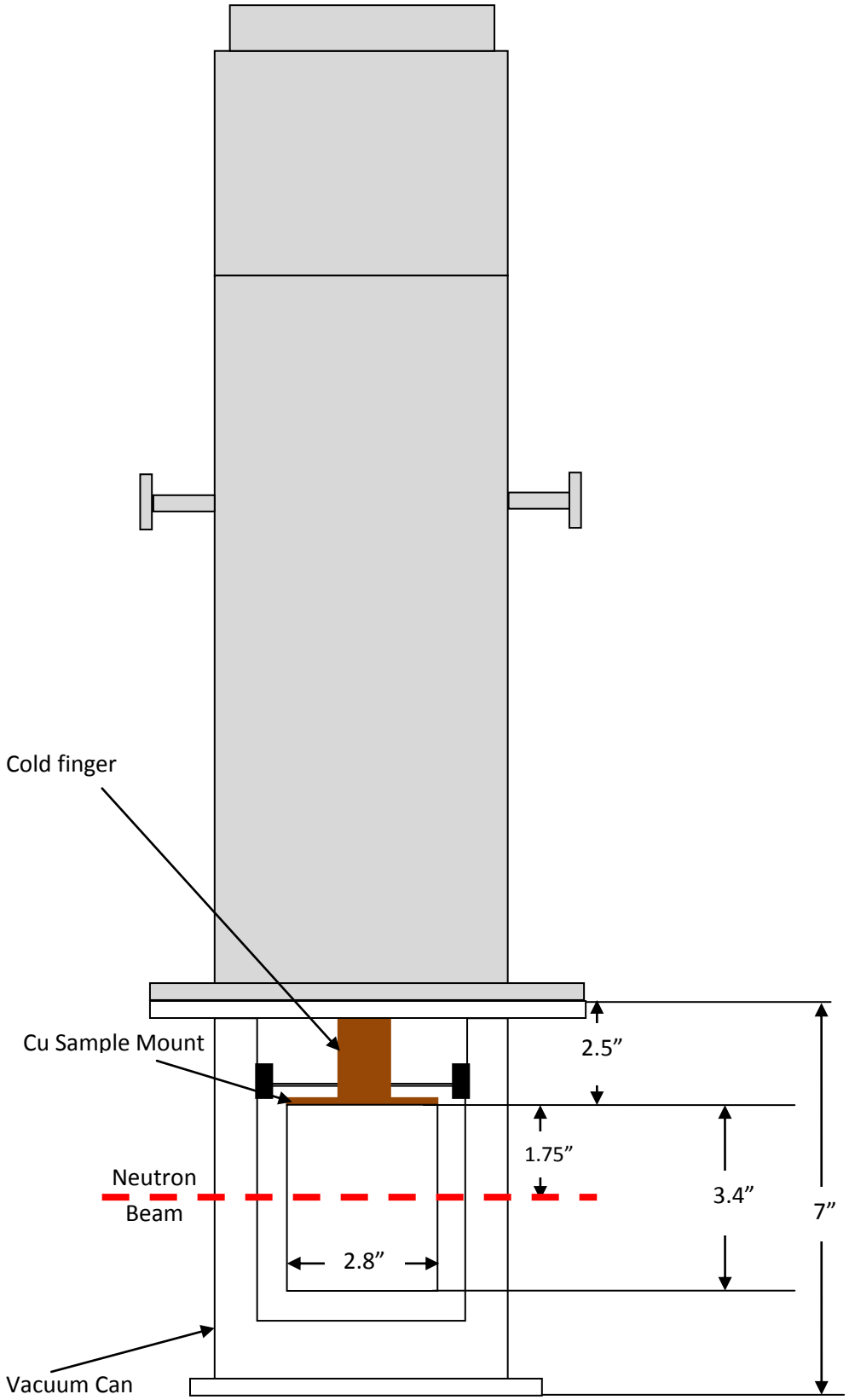
Cold finger
Cu Sample Mount
2.5”
1.75”
Neutron
Beam
3.4”
7”
2.8”
Vacuum Can