REVISIONS		
LTR	DESCRIPTION	DATE
A	CHANGED TAPPED HOLES ON JANIS FINGER EXTENSION	01/28/10
B	ADDED VENT PORT ON 4K SHIELD	03/08/10

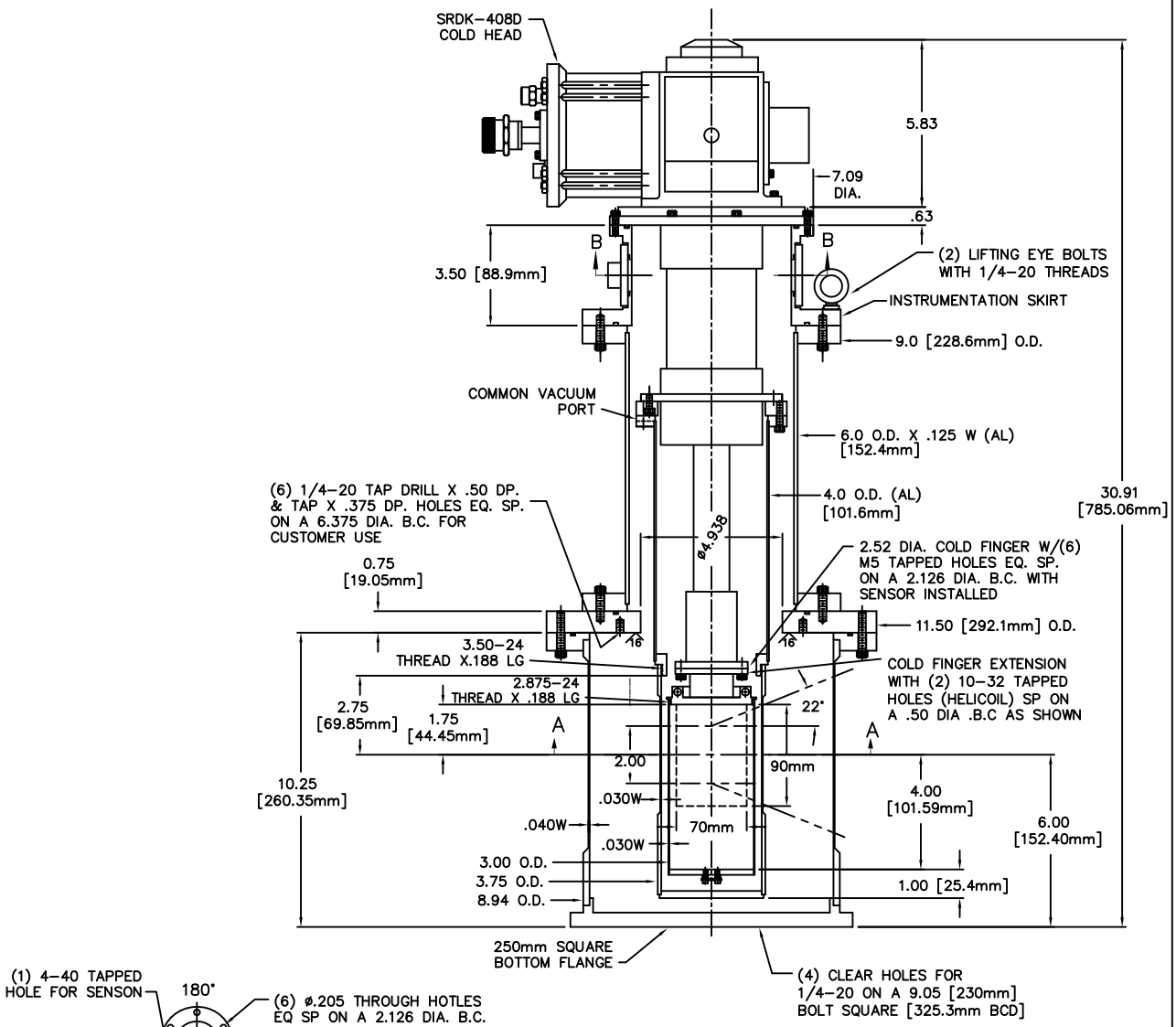

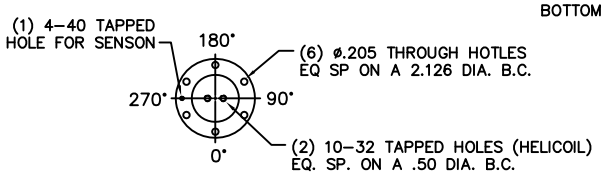

JANIS COLD FINGER EXTENSION (VIEW A-A)

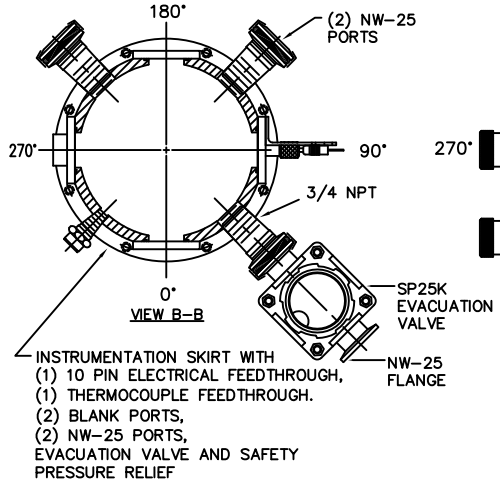

VIEW B-B

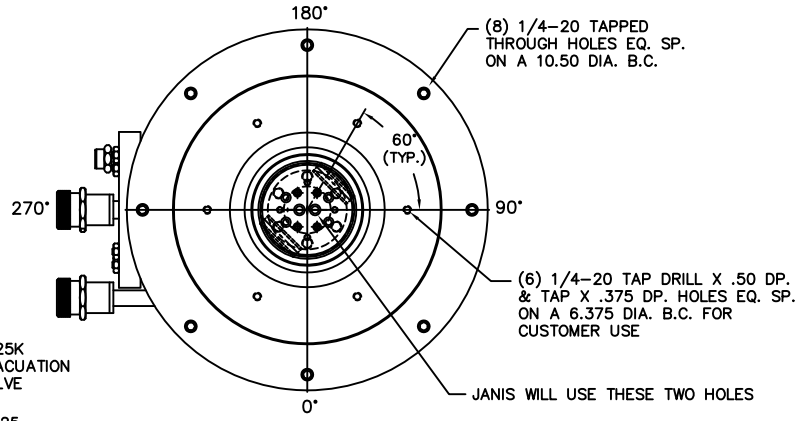

VIEW A-A

NOTE: ALL DIMENSIONS ARE IN INCHES

CONFIDENTIAL AND PROPRIETARY

THIS DRAWING AND/OR INFORMATION CONTAINED HEREIN IS THE SOLE PROPERTY OF THE JANIS RESEARCH COMPANY AND IS NOT TO BE RELEASED OR DIVULGED TO THIRD PARTIES WITHOUT THE EXPRESSED, WRITTEN CONSENT OF THE JANIS RESEARCH COMPANY, INC.

APPROVALS		
DEPT.	SIG.	DATE
DWN BY	H.Z.	05/20/09
CHK BY		
ENG.		
Q.C.		
RELEASED TO MFG. BY		
CUST. APPROVAL BY		

JANIS RESEARCH CO.
WILMINGTON, MA.

TITLE SPECIAL SHI-4 FOR NEUTRON SCATTERING

SIZE	DRAWING NO.	REV.
D	D05-20-09D	B

P. N. SCALE: 1/2 SHT 1 OF 1